Test Report Number: SZHH01987135

Applicant: STRATEGIC SPORTS LTD
UNIT 1016,10/F NORTH TOWER, CONCORDIA
PLAZA 1 SCIENCE MUSEUM ROAD, EAST
TST KOWLOON, HONG KONG

Date: Nov 14, 2024

Attn: Billy Li

Sample Description:

Eight (8) pieces of submitted sample said to be :

Item Name	:	**Helmets for Alpine Skiers and Snowboarders**
Item/Model No.	:	**S-298 ERT**
Helmet size	:	L: 60-63CM
Material for Helmet	:	Shell: PC Liner: Eps, black bead
Date Manufactured	:	2024/10
Factory Name	:	Strategic Sports Ltd
Date Sample Received	:	Oct 28, 2024
Testing Period	:	Oct 28, 2024 ~Nov 14, 2024

Tests conducted:

As requested by the applicant, refer to attached page(s) for details.

Intertek Testing Services Shenzhen Ltd.
深圳天祥质量技术服务有限公司

West Side of 1/F and 3,4,5/F of Bldg. 1, 1-5/F of Bldg. 3, Yuanzheng Science and Technology Industrial Park, No.4012, Wuhe Ave. North, Bantian Street, Longgang District, Shenzhen, China
深圳市龙岗区坂田街道五和大道北 4012 号元征科技工业园 1 号楼 3、4、5 层及 1 楼西侧半层和 3 号楼整栋 1-5 层

Tel:+86755 26020111
www.intertek.com
www.intertek.com.cn

Test Report Number: SZHH01987135

Conclusion:

Tested sample	Standard	Result
Submitted sample	EN 1077:2007 standard specification for helmets for alpine skiers and snowboarders	Pass

Authorized by:
For Intertek Testing Services
Shenzhen Ltd.

Andy, Fu Bo
Title: Manager
CNAS Approved Signatory

Intertek Testing Services Shenzhen Ltd.
深圳天祥质量技术服务有限公司

West Side of 1/F and 3,4,5/F of Bldg. 1, 1-5/F of Bldg. 3, Yuanzheng Science and Technology Industrial Park, No.4012, Wuhe Ave. North, Bantian Street, Longgang District, Shenzhen, China
深圳市龙岗区坂田街道五和大道北 4012 号元征科技工业园 1 号楼 3、4、5 层及 1 楼西侧半层和 3 号楼整栋 1-5 层

Tel:+86755 26020111
www.intertek.com
www.intertek.com.cn

Test Report Number: SZHH01987135

Tests Conducted

1 Standard Specification for Helmets for alpine skiers and snowboarders

As per EN 1077:2007: standard specification for helmets for alpine skiers and snowboarders.

Number of samples tested: Eight (8) pieces

Helmets size: 60-63cm

Class of protection: B

Test headform: 605mm/625mm(EN960:2006)

Clause	Test Items	Result
4.1	Materials For those parts of the helmet coming into contact with the skin the material used shall not be subject to any known appreciable alteration from contact with sweat or with substances likely to be found in toiletries. Materials shall not be used which are known to cause skin disorders or other adverse effects on health. For a material not in general use advice as to its suitability shall be sought before its introduction.	
4.2	Construction	
4.2.1	General The helmet shall be so designed and shaped that parts of it (for example visor, rivets, ventilators, edges, fastening device etc.) are not likely to injure the user. This can be verified in accordance with 5.2. NOTE Helmets should: - have low weight; - be easy to put on and take off; - be usable with spectacles; - not significantly interfere with the ability of the user to hear; - have good durability and withstand normal handling; - permit cleaning.	P (See Appendix)
4.2.2	Retention system 4.2.2.1 General Means shall be provided for retaining the helmet on the wearer's head. All parts of the retention system shall be securely attached to the system or to the helmet, so it would not come off during its use. This can be verified in accordance with Clauses 5.7 and 5.8 NOTE It is recommended that the opening mechanism is marked with red or orange colour. The colour of any part of the retention system shall not be green. 4.2.2.2 Chin straps The chin strap shall not include a chin cup. Any chin strap shall be not less than 15 mm wide. This can be verified in accordance with 5.2. Chin straps may be fitted with means of enhancing comfort for the wearer. 4.2.2.3 Fastening devices Any retention system shall be fitted with a device to adjust and maintain tension in the system. The strength in the system shall be in accordance with 4.7.1.	P (W:16.0mm Colour:Black)

Intertek Testing Services Shenzhen Ltd.
深圳天祥质量技术服务有限公司

West Side of 1/F and 3,4,5/F of Bldg. 1, 1-5/F of Bldg. 3, Yuanzheng Science and Technology Industrial Park, No.4012, Wuhe Ave. North, Bantian Street, Longgang District, Shenzhen, China
深圳市龙岗区坂田街道五和大道北 4012 号元征科技工业园 1 号楼 3、4、5 层及 1 楼西侧半层和 3 号楼整栋 1-5 层

Tel:+86755 26020111
www.intertek.com
www.intertek.com.cn

Test Report Number: SZHH01987135

Tests Conducted

Clause	Test Items	Result
4.3	Field of vision When tested in accordance with EN 13087-6, there shall be no occultation in the field of vision bounded by angles as follows: - horizontally 105°; - upwards 25°; - downwards 45°.	P (Horizontally: >105° Upward: >25° Downwards: >45 °)
4.4	Extent of coverage	
4.4.1	Class A For Class A, when positioned in accordance with EN 13087-6 on a headform of appropriate size, the helmet shall cover at least the area above the line BCDEA' in Figure 1. No parts of the coverage may be detachable. Those parts covering the area below the reference plane (shaded in Figure 1) shall be designed to give some protection against mechanical risks like abrasion. This can be verified in accordance with 5.2. Smaller openings for better hearing and/or ventilation are allowed. 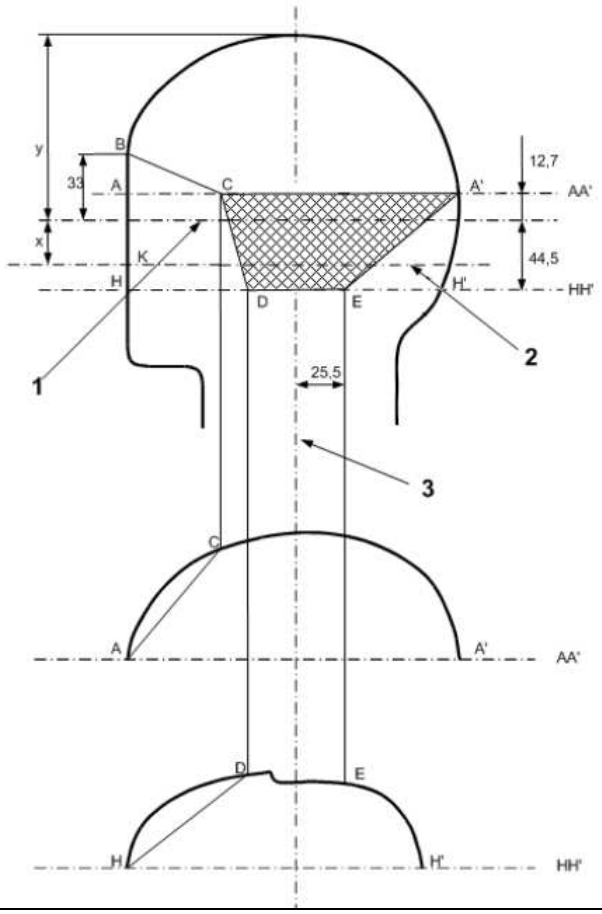 	NA

Intertek Testing Services Shenzhen Ltd.
深圳天祥质量技术服务有限公司

West Side of 1/F and 3,4,5/F of Bldg. 1, 1-5/F of Bldg. 3, Yuanzheng Science and Technology Industrial Park, No.4012, Wuhe Ave. North, Bantian Street, Longgang District, Shenzhen, China
深圳市龙岗区坂田街道五和大道北 4012 号元征科技工业园 1 号楼 3、4、5 层及 1 楼西侧半层和 3 号楼整栋 1-5 层

Tel:+86755 26020111
www.intertek.com
www.intertek.com.cn

Test Report Number: SZHH01987135

Tests Conducted

Clause	Test Items	Result
	The test area for class A is given in Figure 2. Dimensions in millimetres 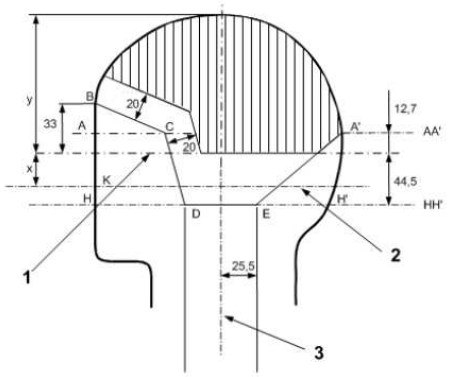 **Key** 1 reference plane 2 basic plane 3 central vertical axis	
4.4.2	Class B For Class B, when positioned in accordance with EN 13087-6 on a headform of appropriate size, the helmet shall cover at least the area above the line BCA' in Figure 1. Parts below the AA' plane (shaded part in Figure 1) are optional and may be detachable and/or removable. Dimensions in millimetres 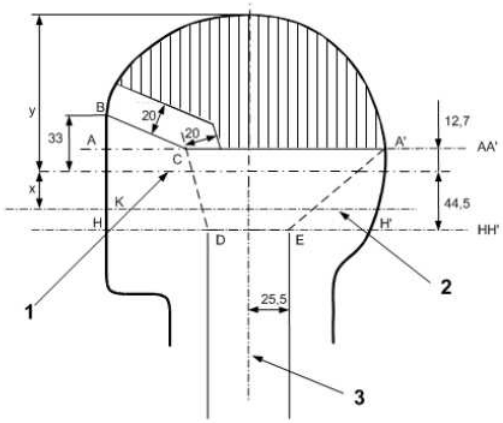 **Key** 1 reference plane 2 basic plane 3 central vertical axis **Figure 3 — Test area for class B**	P
4.5	Shock absorbing capacity When tested in accordance with 5.5 the peak acceleration shall not, for each impact, exceed 250 g.	P (See Appendix)

Intertek Testing Services Shenzhen Ltd.
深圳天祥质量技术服务有限公司

West Side of 1/F and 3,4,5/F of Bldg. 1, 1-5/F of Bldg. 3, Yuanzheng Science and Technology Industrial Park, No.4012, Wuhe Ave. North, Bantian Street, Longgang District, Shenzhen, China
深圳市龙岗区坂田街道五和大道北 4012 号元征科技工业园 1 号楼 3、4、5 层及 1 楼西侧半层和 3 号楼整栋 1-5 层

Tel:+86755 26020111
www.intertek.com
www.intertek.com.cn

Tests Conducted

Clause	Test Items	Result
	Only the flat anvil shall be used. **Table 3 — Testing parameters** Sample: 1 — Ambient temperature Sample: 2 — Low temperature Sample: 3 — Artificial ageing Impact each helmet on two sites. The impact sites on the same sample shall be separated by a distance of minimum 100 mm measured as a chord with a divider. The impacts shall be directed towards the centre of gravity of the headform. The velocity of the headform shall be 5,42 m/s +0 -0,1 (this is theoretically equivalent to a drop height of 1 500 mm). The velocity of the headform shall be measured at a distance between 60 mm and 10 mm prior to impact, to an accuracy of 1 %. The testing shall be conducted under recorded conditions of room temperature.	
4.6	Resistance to penetration When tested in accordance with 5.6 the point of the punch shall not touch the headform. The helmets shall first undergo the process of conditioning according to 5.3, selected by the test laboratory, which is likely to give the least satisfactory results. Perform the test on sample 4 (see Table 2). The velocity of the striker shall be one of the following: a) 3,84 m/s +0 - 0.1 m/s (this is theoretically equivalent to a drop height of 750 mm) for class A helmets; b) 2,71 m/s +0 - 0.1 m/s (this is theoretically equivalent to a drop height of 375 mm) for class B helmets. Each helmet shall be impacted three times, each time in a different site. The sites shall be at least 100 mm apart measured as chords with dividers.	P (See Appendix)
4.7	Retention system performance	
4.7.1	Strength When tested in accordance with 5.7, the dynamic extension shall not exceed 35 mm and the residual extension shall not exceed 25 mm. For this purpose, extension includes slippage of the fastening device. Following the test the retention system shall still permit the helmet to be released from the headform by normal operation of the release system. Damage to the retention system shall be accepted provided that the above requirements are met.	P (See Appendix)
4.7.2	Effectiveness When tested in accordance with 5.8 the helmet shall not come off the headform.	P (Did not come off)
4.8	Durability After being tested the helmet shall not show damage that would cause an additional injury to the wearer's head (sharp edges, points etc.). This can be verified in accordance with 5.2	P
5.2	Inspection and determination of mass	P

Intertek Testing Services Shenzhen Ltd.
深圳天祥质量技术服务有限公司

West Side of 1/F and 3,4,5/F of Bldg. 1, 1-5/F of Bldg. 3, Yuanzheng Science and Technology Industrial Park, No.4012, Wuhe Ave. North, Bantian Street, Longgang District, Shenzhen, China
深圳市龙岗区坂田街道五和大道北 4012 号元征科技工业园 1 号楼 3、4、5 层及 1 楼西侧半层和 3 号楼整栋 1-5 层

Tel:+86755 26020111
www.intertek.com
www.intertek.com.cn

Test Report Number: SZHH01987135

Tests Conducted

Clause	Test Items	Result
	If no test method is specified in this European Standard the compliance with the requirements have to be checked by visual and/or tactile examination. The width of the chin strap shall be measured prior to testing and without any tension on the strap. Determine the mass of the helmets of the same size submitted for testing. Calculate and record the mean value in grams rounded off to the nearest 10 g stating the size of the helmet.	(See Appendix)
6	Marking Each helmet shall be permanently marked in such a way that the following information is easily legible by the user and is likely to remain legible throughout the life of the helmet: ● number of this European Standard, i.e. EN 1077; ● name or trademark of the manufacturer; ● designation of the model; ● designation (on class A helmet only): 'helmet for alpine skiers and for snowboarders – class A'; ● designation (on class B helmet only): 'helmet for alpine skiers and for snowboarders – class B'; ● size or size range of the helmet, quoted as the circumference (in cm) of the head which the helmet is intended to fit; ● weight of the helmet (the average mass in grams of the helmet size in question rounded to the nearest 50 g); ● year and quarter of manufacture.	P
7	Information supplied by the manufacturer With every helmet distinct information in the language(s) of the country of sale shall be furnished as follows: ● maintenance, cleaning and storage; ● suitable accessories; ● warning if the shell is made of a material that is known to be adversely affected by contact with hydrocarbons, cleaning fluids, paints, transfers or other extraneous additions; ● that the helmet shall be adjusted to fit the wearer; ● how the helmet should rest on the head to ensure the intended protection (e.g. that it should be placed so as to protect the forehead and not be pushed too far back over the back of the head); ● that a helmet subjected to violent impact shall be discarded; ● the following text: ● 'Class A and class B helmets are for alpine skiers, snowboarders and similar groups. Class A helmets offer comparatively more protection. Class B helmets may offer greater ventilation and better hearing, but protect a smaller area of the head and give a lesser degree of protection from penetration.'	P

Abbreviation: P = Pass; NA = Not Applicable

Intertek Testing Services Shenzhen Ltd.
深圳天祥质量技术服务有限公司

West Side of 1/F and 3,4,5/F of Bldg. 1, 1-5/F of Bldg. 3, Yuanzheng Science and Technology Industrial Park, No.4012, Wuhe Ave. North, Bantian Street, Longgang District, Shenzhen, China
深圳市龙岗区坂田街道五和大道北 4012 号元征科技工业园 1 号楼 3、4、5 层及 1 楼西侧半层和 3 号楼整栋 1-5 层

Tel:+86755 26020111
www.intertek.com
www.intertek.com.cn

Test Report Number: SZHH01987135

Tests Conducted

Appendix:

Section 5.2 – Inspection and determination of mass

Samples No.	Mass (g)
1	434.2
2	434.3
3	429.2
4	435.7
5	433.4
6	437.2
7	432.3
8	431.9
Average(rounded off to nearest 10g)	433.5(430)

Section 4.5–Shock absorbing capacity
Ambient temperature at time of test:21.4°C
Test headform: 605mm(EN960:2006)

Sample No.	Environment Impact	Test anvil	Location Impact	Velocity (m/s)	Peak (Gn)	Compliant
1	Ambient	Flat	Front	5.38	159.1	Pass
		Flat	Rear	5.40	161.3	Pass
2	Low	Flat	Crown	5.34	187.8	Pass
		Flat	Left rear	5.33	147.5	Pass
3	Artificial ageing	Flat	Right	5.39	147.0	Pass
		Flat	Left	5.33	148.5	Pass

Test headform: 625mm(EN960:2006)

Sample No.	Environment Impact	Test anvil	Location Impact	Velocity (m/s)	Peak (Gn)	Compliant
5	Ambient	Flat	Crown	5.40	155.2	Pass
		Flat	Right front	5.34	160.9	Pass
6	Low	Flat	Front	5.32	166.4	Pass
		Flat	Rear	5.40	139.8	Pass
7	Artificial ageing	Flat	Left	5.40	148.1	Pass
		Flat	Right	5.33	153.0	Pass

Intertek Testing Services Shenzhen Ltd.
深圳天祥质量技术服务有限公司

West Side of 1/F and 3,4,5/F of Bldg. 1, 1-5/F of Bldg. 3, Yuanzheng Science and Technology Industrial Park, No.4012, Wuhe Ave. North, Bantian Street, Longgang District, Shenzhen, China
深圳市龙岗区坂田街道五和大道北 4012 号元征科技工业园 1 号楼 3、4、5 层及 1 楼西侧半层和 3 号楼整栋 1-5 层

Tel:+86755 26020111
www.intertek.com
www.intertek.com.cn

Test Report Number: SZHH01987135

Tests Conducted

Section 4.6–Resistance to penetration

Ambient temperature at time of test:21.4°C

Sample No.	Location Impact	Velocity (m/s)	The point of the punch touch the headform or not	Compliant
4	Right front	2.70	No	Pass
	Left front	2.71	No	Pass
	Rear	2.71	No	Pass
8	Left front	2.71	No	Pass
	Right front	2.70	No	Pass
	Rear	2.70	No	Pass

Section 4.7.1–Retention system strength

Test headform: 605mm(EN960:2006)

Sample No.	Dynamic extension (mm)	Residual extension (mm)	Compliant
4	12.6	9.4	Pass

Test headform: 625mm(EN960:2006)

Sample No.	Dynamic extension (mm)	Residual extension (mm)	Compliant
8	14.2	11.0	Pass

Photos for reference

Front view	

Intertek Testing Services Shenzhen Ltd.
深圳天祥质量技术服务有限公司

West Side of 1/F and 3,4,5/F of Bldg. 1, 1-5/F of Bldg. 3, Yuanzheng Science and Technology Industrial Park, No.4012, Wuhe Ave. North, Bantian Street, Longgang District, Shenzhen, China
深圳市龙岗区坂田街道五和大道北 4012 号元征科技工业园 1 号楼 3、4、5 层及 1 楼西侧半层和 3 号楼整栋 1-5 层

Tel:+86755 26020111
www.intertek.com
www.intertek.com.cn

Test Report Number: SZHH01987135

Tests Conducted

Side view	
Back view	

Intertek Testing Services Shenzhen Ltd.
深圳天祥质量技术服务有限公司

West Side of 1/F and 3,4,5/F of Bldg. 1, 1-5/F of Bldg. 3, Yuanzheng Science and Technology Industrial Park, No.4012, Wuhe Ave. North, Bantian Street, Longgang District, Shenzhen, China
深圳市龙岗区坂田街道五和大道北 4012 号元征科技工业园 1 号楼 3、4、5 层及 1 楼西侧半层和 3 号楼整栋 1-5 层

Tel:+86755 26020111
www.intertek.com
www.intertek.com.cn

Test Report Number: SZHH01987135

Tests Conducted

Top view	
Bottom view	

Intertek Testing Services Shenzhen Ltd.
深圳天祥质量技术服务有限公司

West Side of 1/F and 3,4,5/F of Bldg. 1, 1-5/F of Bldg. 3, Yuanzheng Science and Technology Industrial Park, No.4012, Wuhe Ave. North, Bantian Street, Longgang District, Shenzhen, China
深圳市龙岗区坂田街道五和大道北 4012 号元征科技工业园 1 号楼 3、4、5 层及 1 楼西侧半层和 3 号楼整栋 1-5 层

Tel:+86755 26020111
www.intertek.com
www.intertek.com.cn

Test Report Number: SZHH01987135

Tests Conducted

Label	Standard:EN1077：2007 CLASS B Model: S-298 ERT Size:60-63cm Weight: 450g Date of Manf: 10/2024 Made In China By Strategic Sports Limited Unit 1016,10/F North Tower,Concordia Plaza 1 Science Museum Road,East TST,Kowloon,Hong Kong. WARNING! HELMET FOR ALPINE SKIERS AND FOR SNOWBOARDERS-CLASS B NOT FOR USE IN MOTORSPORTS. SNOWBOARDING OR SKIING IS REAL LIFE NATURAL & MAN-MADE OBSTACLES ARE ALWAYS PRESENT. WHILE NO HELMET CAN GUARANTEE YOUR SAFETY, USE OF A HELMET TAKING LESSONS AND BEING RESPONSIBLE WITH COMMON SENSE CAN TOGETHER SIGNIFICANTLY REDUCE THE RISK OF CATASTROPHIC HEAD INJURY REMEMBER-WEARING A HELMET DOES NOT MAKE YOU INVINCIBLE CE CONFORMS TO EN1077:2007
Instruction	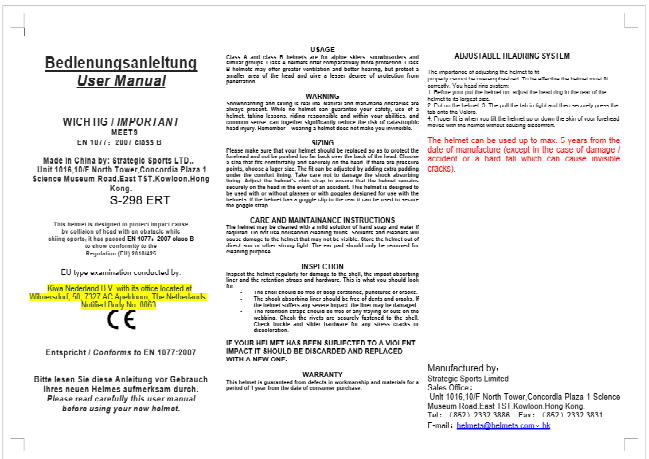 Bedienungsanleitung User Manual WICHTIG / IMPORTANT MEETS EN 1077: 2007 CLASS B Made in China by: Strategic Sports LTD., Unit 1016,10/F North Tower,Concordia Plaza 1 Science Museum Road,East TST,Kowloon,Hong Kong. S-298 ERT This helmet is designed to prevent impact injuries or collision of head with an obstacle while skiing sports. It has passed EN 1077: 2007 class B to show conformity to the Regulation (EU) 16/686/EC EU type examination conducted by: Kiwa Nederland B.V. with its office located at Wilmersdorf, 50, 7327 AP Apeldoorn, The Netherlands. Notified Body No. 0063 CE Entspricht / Conforms to EN 1077:2007 Bitte lesen Sie diese Anleitung vor Gebrauch Ihres neuen Helmes aufmerksam durch. Please read carefully this user manual before using your new helmet. USAGE Class A and class B helmets are for alpine skiers, snowboarders, and similar sports. Class A helmets provide maximum shock protection, and B helmets may offer greater ventilation and better hearing, but protect a smaller area of the head and give a lesser degree of protection from penetration. WARNING: Remembering that skiing is real life, natural and man-made obstacles are always present. While no helmet can guarantee your safety, use of a helmet, taking lessons, riding reasonably and within your abilities, and common sense can together significantly reduce the risk of catastrophic head injury. Remember: wearing a helmet does not make you invincible. SIZING Please make sure that your helmet should be replaced so as to protect the forehead and not be pushed too far back over the back of the head. Choose a size that fits comfortably and securely on the head. If there are pressure points, choose a larger size. The fit can be adjusted by adding extra padding inside the helmet. Make sure the chin strap is adjusted properly before skiing. Before the skiing, take care to be sure that the helmet is fitting securely on the head in the event of an accident. The helmet is designed to be used with or without glasses or with goggles designed for use with the helmets. If the helmet has a goggle clip in the rear it can be used to secure the goggle strap. CARE AND MAINTAINANCE INSTRUCTIONS The helmet may be cleaned with a mild solution of hand soap and water. If required, use soft non-abrasive cleaning cloth. Solvents and cleaners can cause damage to the helmet that may not be visible. Store the helmet out of direct sun in cool, strong light. The sun and should only be exposed for cleaning purposes. INSPECTION Inspect the helmet regularly for damage to the shell, the impact absorbing liner and the retention straps and hardware. This is what you should look for: - No crack crazes or nicks or deep scratches, puncture or erosion. - The shock absorbing liner should be free of dents and creaks. If the helmet suffers any severe impact the liner may be damaged. - No minimum crazes cause as nick or any tearing or wear on the webbing. Check the rivets are securely fastened to the shell. Check buckle and other hardware for any signs cracks or deterioration. IF YOUR HELMET HAS BEEN SUBJECTED TO A VIOLENT IMPACT IT SHOULD BE DISCARDED AND REPLACED WITH A NEW ONE. WARRANTY This helmet is guaranteed from defects in workmanship and materials for a period of 1 year from the date of consumer purchase. ADJUSTABLE HEADING SYSTEM The importance of adjusting the helmet to fit properly cannot be overemphasized. To be effective the helmet must fit comfortably. You have nine points: 1. Before you put the helmet on, adjust the tread ring to the size of the helmet to its largest size. 2. Put on the helmet. 3. The pull the tab to tight and then securely press the tab into the frame. 4. Press fit is when you lift the helmet so as does the skin of your forehead move with the helmet without causing pressure. The helmet can be used up to max. 5 years from the date of manufacture (except in the case of damage / accident or a hard fall which can cause invisible cracks). Manufactured by: Strategic Sports Limited Sales Office: Unit 1016,10/F North Tower,Concordia Plaza 1 Science Museum Road East 151 Kowloon Hong Kong Tel：(852) 2357 5896 Fax：(852) 2357 5831 E-mail：helmets@helmets.com.hk

Intertek Testing Services Shenzhen Ltd.
深圳天祥质量技术服务有限公司

West Side of 1/F and 3,4,5/F of Bldg. 1, 1-5/F of Bldg. 3, Yuanzheng Science and Technology Industrial Park, No.4012, Wuhe Ave. North, Bantian Street, Longgang District, Shenzhen, China
深圳市龙岗区坂田街道五和大道北 4012 号元征科技工业园 1 号楼 3、4、5 层及 1 楼西侧半层和 3 号楼整栋 1-5 层

Tel:+86755 26020111
www.intertek.com
www.intertek.com.cn

Test Report Number: SZHH01987135

Tests Conducted

Test line (Test headform: 605mm(EN960:2006))	
Test line (Test headform: 625mm(EN960:2006))	

Intertek Testing Services Shenzhen Ltd.
深圳天祥质量技术服务有限公司

West Side of 1/F and 3,4,5/F of Bldg. 1, 1-5/F of Bldg. 3, Yuanzheng Science and Technology Industrial Park, No.4012, Wuhe Ave. North, Bantian Street, Longgang District, Shenzhen, China
深圳市龙岗区坂田街道五和大道北 4012 号元征科技工业园 1 号楼 3、4、5 层及 1 楼西侧半层和 3 号楼整栋 1-5 层

Tel:+86755 26020111
www.intertek.com
www.intertek.com.cn

Test Report Number: SZHH01987135

Tests Conducted

Impact sites #1	
Impact sites #2	

Intertek Testing Services Shenzhen Ltd.
深圳天祥质量技术服务有限公司

West Side of 1/F and 3,4,5/F of Bldg. 1, 1-5/F of Bldg. 3, Yuanzheng Science and Technology Industrial Park, No.4012, Wuhe Ave. North, Bantian Street, Longgang District, Shenzhen, China
深圳市龙岗区坂田街道五和大道北 4012 号元征科技工业园 1 号楼 3、4、5 层及 1 楼西侧半层和 3 号楼整栋 1-5 层

Tel:+86755 26020111
www.intertek.com
www.intertek.com.cn

Test Report Number: SZHH01987135

Tests Conducted

Penetration site #1	
Penetration site #2	

Intertek Testing Services Shenzhen Ltd.
深圳天祥质量技术服务有限公司

West Side of 1/F and 3,4,5/F of Bldg. 1, 1-5/F of Bldg. 3, Yuanzheng Science and Technology Industrial Park, No.4012, Wuhe Ave. North, Bantian Street, Longgang District, Shenzhen, China
深圳市龙岗区坂田街道五和大道北 4012 号元征科技工业园 1 号楼 3、4、5 层及 1 楼西侧半层和 3 号楼整栋 1-5 层

Tel:+86755 26020111
www.intertek.com
www.intertek.com.cn

Test Report Number: SZHH01987135

Tests Conducted

Penetration site #3	

****

End of report

*The statements of conformity reported have considered the decision rule agreed, namely that Intertek have taken account of measurement uncertainty as calculated by Intertek, and applied according to ILAC-G8/09:2019-(Non-binary acceptance based on guard band **w** = **U**) except designation from the customer, regulation or test specification. This decision rule only applies to the numeric test results. Full details of our agreed decision rules and the associated risk can be viewed: https://www.intertek.com.cn/diypage/upload/SZ-AP15-HLS-QA.pdf.*

The sample(s) and sample information hereto are provided by the client who shall be solely responsible for the authenticity and integrity thereof. The results shown in this report relate only to the sample(s) received and tested. It is not intended to be a recommendation for any particular course of action. Intertek does not accept a duty of care or any other responsibility to any person other than the Client in respect of this report and only accepts liability to the Client insofar as is expressly contained in the terms and conditions governing Intertek's provision of services to you. Intertek makes no warranties or representations either express or implied with respect to this report save as provided for in those terms and conditions. We have aimed to conduct the review on a diligent and careful basis and we do not accept any liability to you for any loss arising out of or in connection with this report, in contract, tort, by statute or otherwise, except in the event of our gross negligence or wilful misconduct. This report shall not be reproduced unless with prior written approval from Intertek.

Intertek Testing Services Shenzhen Ltd.
深圳天祥质量技术服务有限公司

West Side of 1/F and 3,4,5/F of Bldg. 1, 1-5/F of Bldg. 3, Yuanzheng Science and Technology Industrial Park, No.4012, Wuhe Ave. North, Bantian Street, Longgang District, Shenzhen, China
深圳市龙岗区坂田街道五和大道北 4012 号元征科技工业园 1 号楼 3、4、5 层及 1 楼西侧半层和 3 号楼整栋 1-5 层

Tel:+86755 26020111
www.intertek.com
www.intertek.com.cn